FORM NO. MS-4800-19
REPLACES FORM NO. MS-4800-18
FILE IN SECT. 2 OF SERVICE MANUAL

Illustrated Parts List

MODEL SERIES

142700 to 143707

TYPE NUMBERS	TYPE NUMBERS
0010 to 0020	0025 to 0037
0110 to 0154	0110 to 0140
9122 to 9154	9022 to 9025
503000 to 503037	503500 to 503573

TO FIND
THE CORRECT NUMBER OF THE PART YOU NEED:
FOLLOW THE INSTRUCTIONS BELOW.

A. Refer to Engine Model, Type and Serial Number that is stamped on the blower housing or name plate of engine. (Engine type numbers such as 503572 are listed complete. Engine type numbers such as 0142 01 are listed herein only as 0142. The two digits (01 or 02, etc.) to the right of the space are not needed for parts identification). Then use the Illustrated Parts List covering these Model Series.

B. Refer to Illustrated Parts section and compare the old part with illustration. The number on the illustration is the Reference Number. Assemblies include all parts shown in frames. All parts shown in assembly frames on which individual reference numbers are given can be purchased separately.

C. After the Reference Number has been identified, refer to the Numerical Parts List, where Reference and Master Part Numbers are listed. THE MASTER PART IS USED ON ALL TYPE NUMBERS EXCEPT THOSE TYPE NUMBERS UNDER "NOTE"

D. If a "Note" appears below the Master Part Number, this means that this part differs from the Master Part for certain types. If the Type Number is listed under "Note", order the part referred to.

E. If the Engine Type Number does not appear after any part number listed under "Note", use the Master Part Number.

F. For Type Numbers higher than those covered by this book, please refer to the factory if you are unable to identify the part by comparison.

PRINTED IN U.S.A.

ORIGINAL BRIGGS & STRATTON SERVICE PARTS ®

142700 to 143707

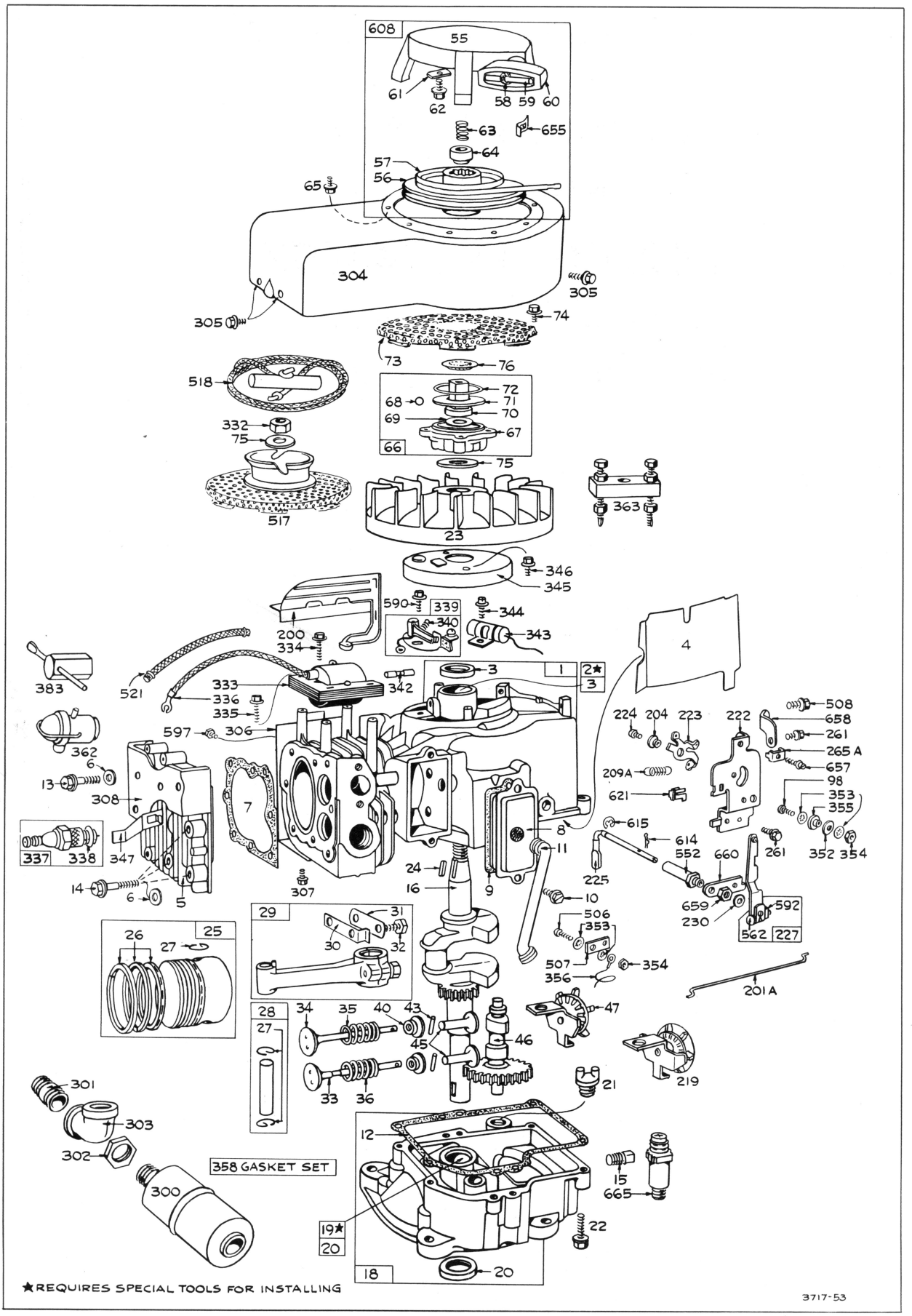

Assemblies include all parts shown in frames

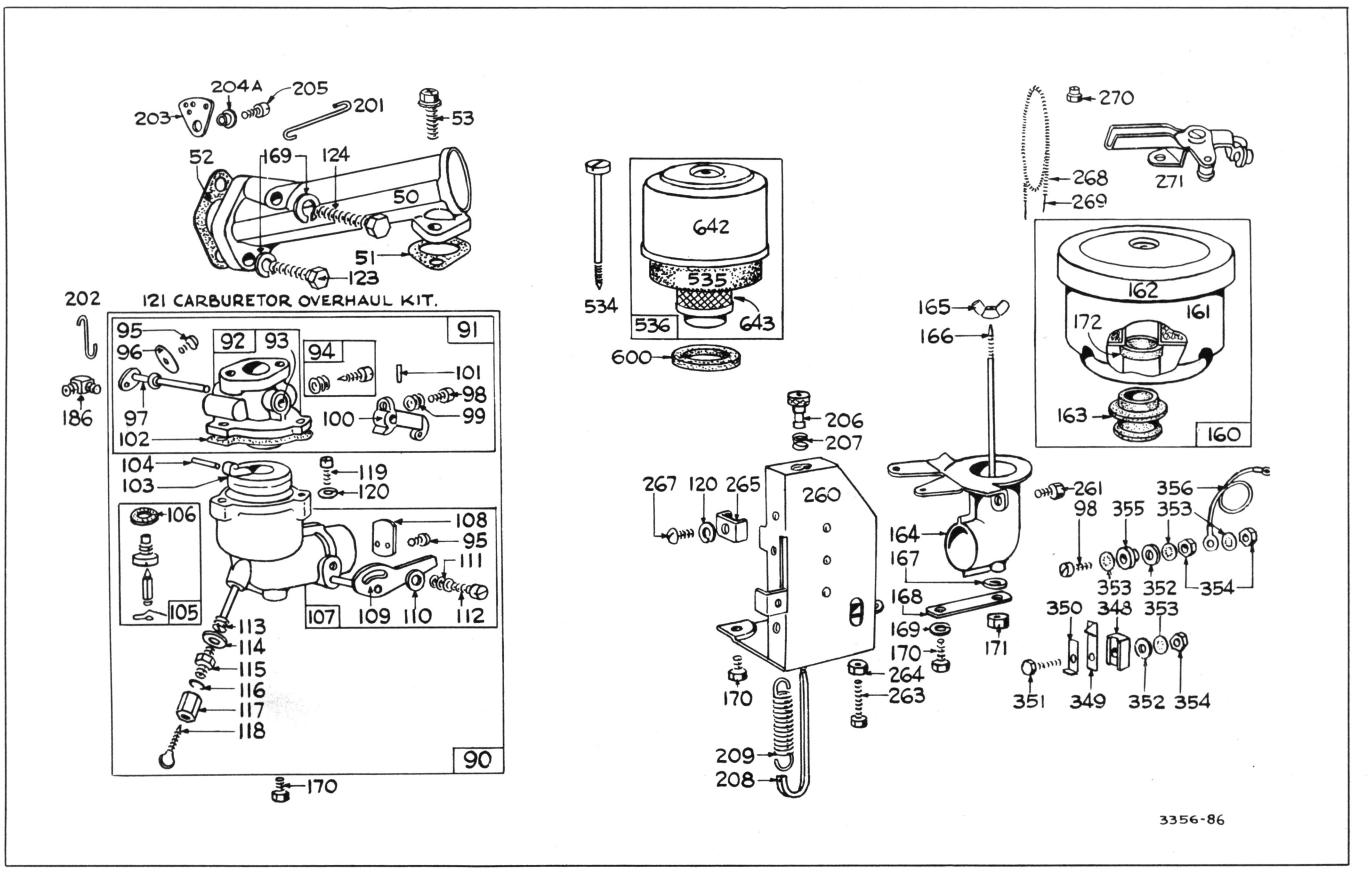

Assemblies include all parts shown in frames

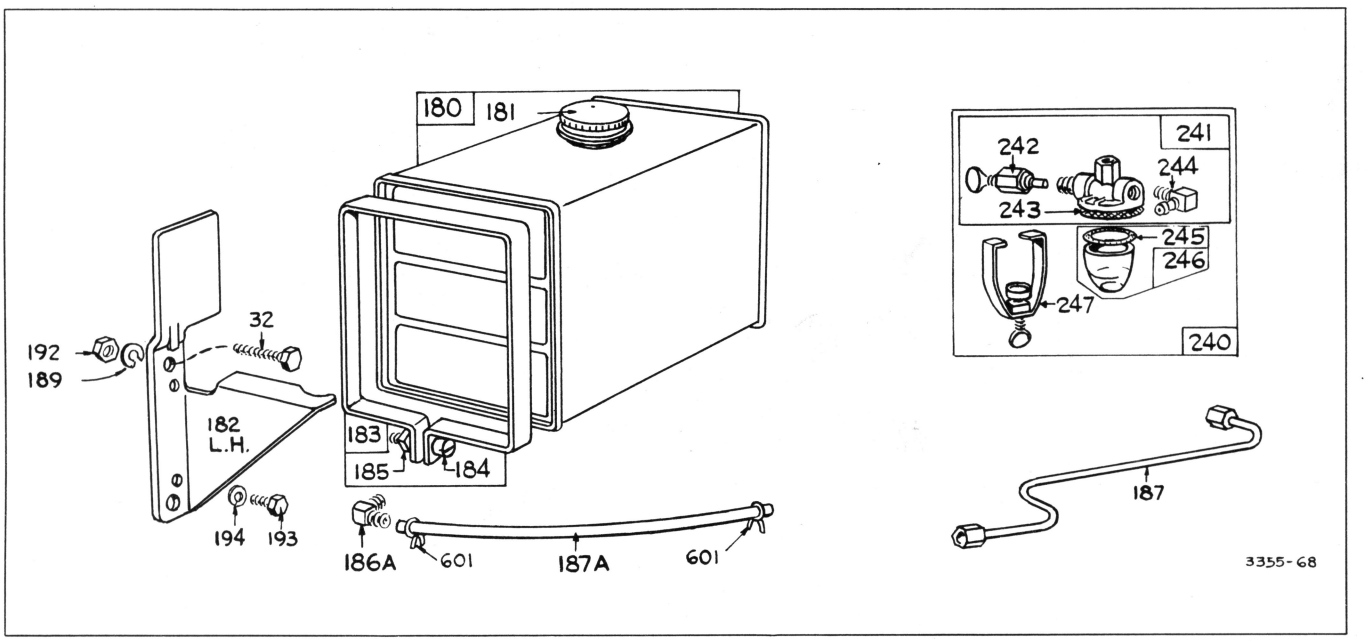

Assemblies include all parts shown in frames

142700 to 143707

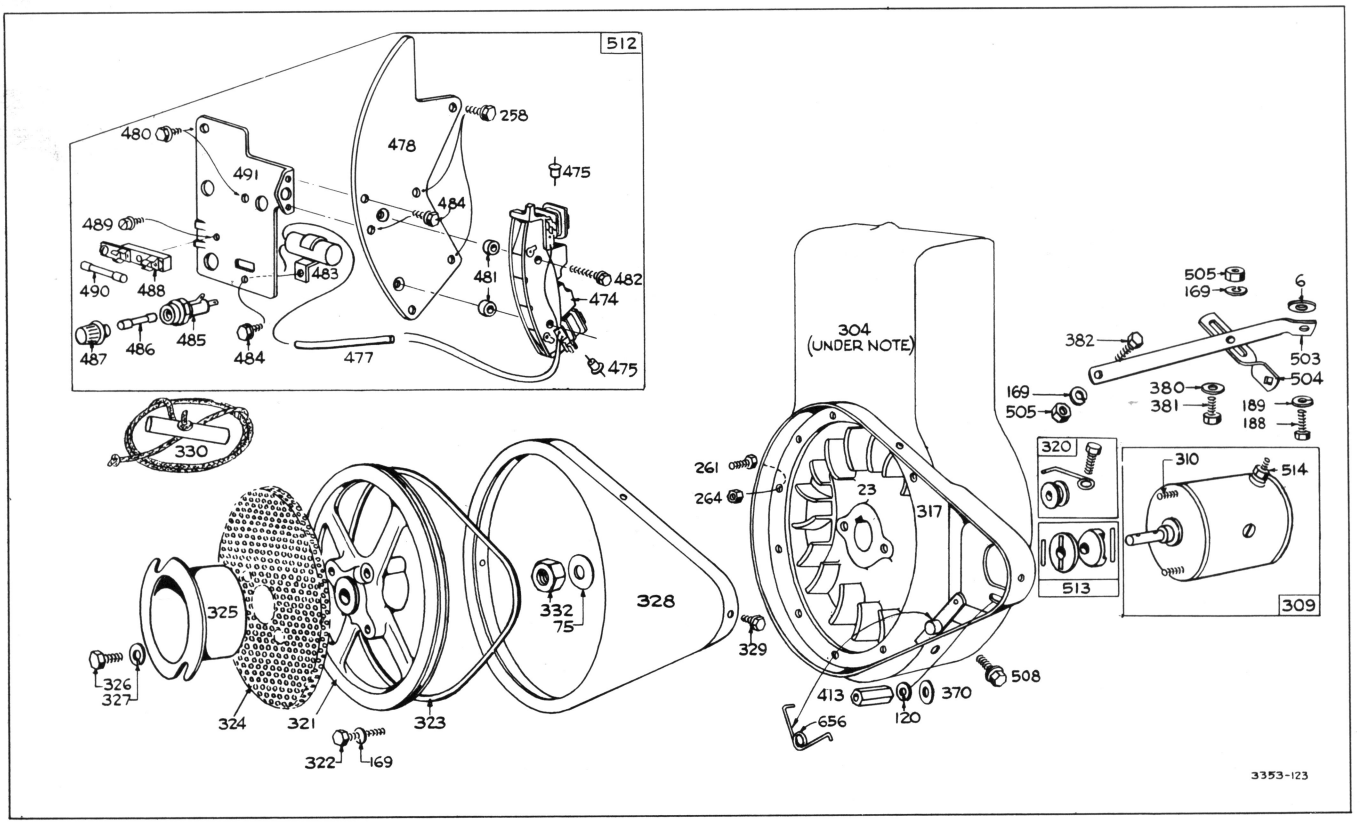

Assemblies include all parts shown in frames

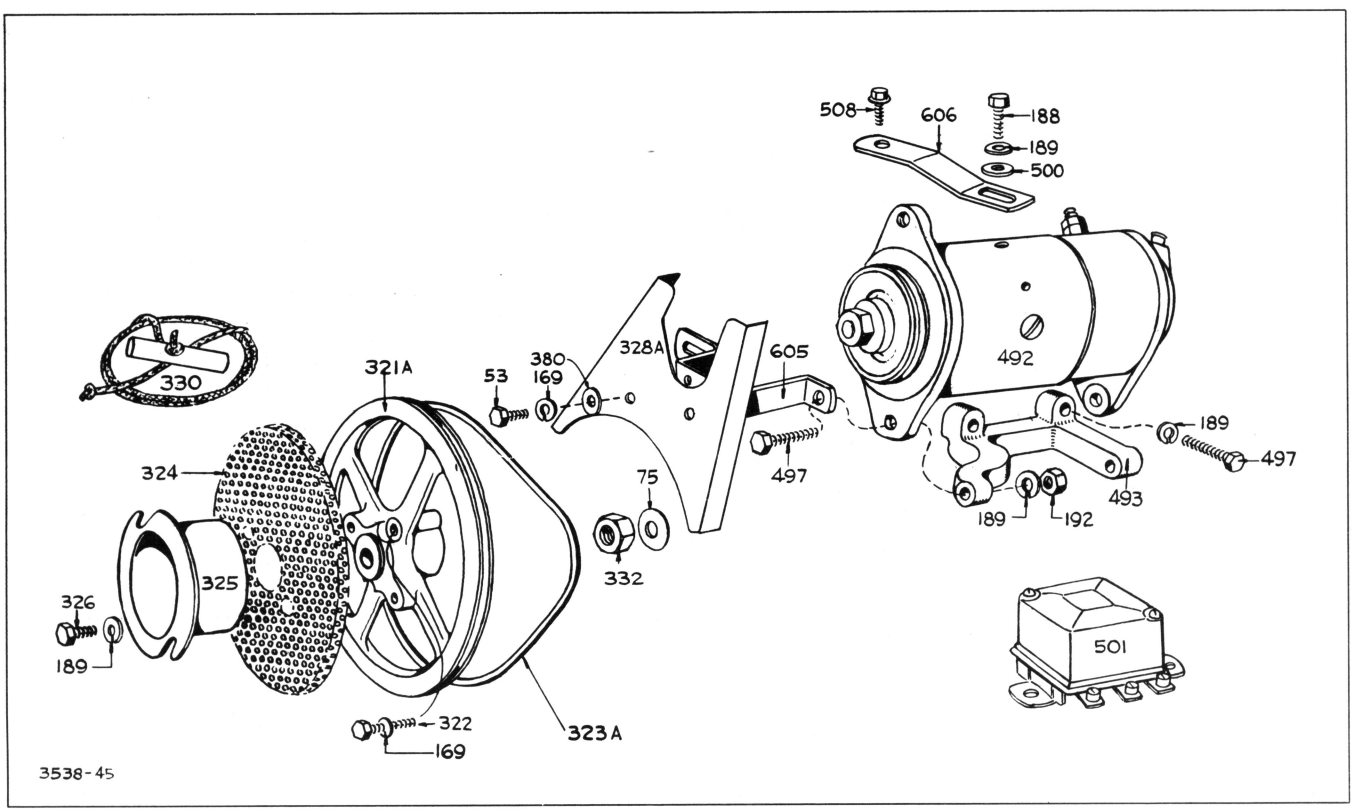

Assemblies include all parts shown in frames

REF. NO.	PART NO.	DESCRIPTION
1	**299281**	Cylinder Assembly (Sleeve Bore) This group of Cylinders, including No. 295877, used on **Model 143700** Series.
	Note:	**296018** Cylinder Assy. (Sleeve Bore) Used on type Nos. 0117, 0126, 0127, 0128, 0129, 0130, 0131, 0132, 0133, 0134, 0137, 0138, 0139, 503523, 503524, 503525, 503526, 503527, 503533, 503534, 503535, 503538, 503539, 503542, 503543, 503549, 503553, 503554, 503555, 503557, 503559, 503562, 503565, 503566, 503570. **298781** Cylinder Assy. (Sleeve Bore) Used on type Nos. 9023, 9024.
	299218	Cylinder Assembly "Kool-Bore*" This group of Cylinders, including No. 297699, used on **Model 142700** Series.
	Note:	**297721** Cylinder Assy. "Kool-Bore*" Used on type Nos. 0018, 0019, 0117, 0118, 0131, 0134, 0141, 0144, 0146, 0148, 0150, 503020, 503021, 503022, 503023, 503029, 503031, 503032, 503033.
2	**295962**	Bushing – Cylinder
	Note:	Requires special tools for installation.
3	**294606**	Seal – Oil
4	**221001**	Plate – Cylinder Baffle Used on **Model 142700 and 143700** Series type Nos. 9000 to 9154 after Serial No. 6410071.
	Note:	**298480** Plate – Cyl. Baffle Used on **Model 142700 and 143700** Series type Nos. 9000 to 9154 before Serial No. 6410081.
5	**210578**	Head – Cylinder
6	**22963**	Washer – Plain
7	**♦27751**	Gasket – Cylinder Head
8	**294988**	Breather Assembly
9	**♦27803**	Gasket – Valve Cover
10	**93394**	Screw – Breather Mounting Sem
11	**67068**	Tube – Breather
	Note:	**298747** Tube – Breather Used on **Model 142700** Series type No. 9152.
12	**♦27750**	Gasket – Crankcase Cover – 1/64" thick
	♦27876	Gasket – Crankcase Cover – .005" thick
	♦27877	Gasket – Crankcase Cover – .009 thick
13	**93210**	Screw – Cylinder Head (2-9/32" long)
14	**93211**	Screw – Cylinder Head (2-21/32" long)
15	**91084**	Plug – Oil Drain
	Note:	**93418** Plug – Oil Drain (Hexagon Socket Head) Used on **Model 142700** Series type Nos. 0142, 503027, 503030, 503032; also used on **Model 143700** Series type Nos. 0137, 503570.
16	**260356**	Crankshaft
	Note:	**260394** Crankshaft Used on **Model 143700** Series type Nos. 0122, 503518, 503531, 503544, 503545, 503546. **260498** Crankshaft Used on **Model 143700** Series type Nos. 503530, 503537. **260506** Crankshaft Used on **Model 142700** Series type Nos. 0151, 0152, 0153, 9151. **260536** Crankshaft Used on **Model 143700** Series type Nos. 503543, 503554. **260707** Crankshaft Used on **Model 142700** Series type No. 503023. **260970** Crankshaft Used on **Model 142700** Series type No. 0137.
18	**298616**	Sump – Oil
	Note:	When replacing the Sump on **Model 142700 and 143700** Series type Nos. 9000 to 9154 before Serial No. 6410081, Oil Slinger, Governor Gear and Bracket Assy. No. 298614 must also be ordered and used. **296594** Sump – Oil Used on **Model 143700** Series type Nos. 0149, 503543, 503554, 503570.
19	**295963**	Bushing – Oil Sump
	Note:	Requires special tools for installation.
20	**298423**	Seal – Oil
21	**66768**	Plug – Oil Filler
22	**93205**	Screw – Sump Mtg. Sem
23	**295214**	Flywheel
	Note:	**296335** Flywheel Used on **Model 142700** Series type No. 9148; also used on **Model 143700** Series type Nos. 0117, 0123, 0124, 503532, 503534, 503536, 503537, 503540, 503546, 503548, 503552, 503564, 503569.
24	**61760**	Key – Flywheel
		Model 143700 Series Piston Assemblies (Sleeve Bore)
25	**295842**	Piston Assy. – Standard
	295846	Piston Assembly – .010" O.S.
	295848	Piston Assembly – .020" O.S.

*Trademark of Briggs & Stratton Corp.

♦Included in Gasket Set – Part No. 295970

142700 to 143707

REF. NO.	PART NO.	DESCRIPTION
	295850	Piston Assembly – .030" O.S.
		Model 142700 Series Piston Assemblies "Kool-Bore*"
	297692	Piston Assy. – Standard
	297693	Piston Assembly – .010" O.S.
	297694	Piston Assembly – .020" O.S.
	297695	Piston Assembly – .030" O.S.
		Model 143700 Series Piston Ring Sets (Sleeve Bore)
26	**295852**	Ring Set – Piston – Std. Includes: **210703** Ring – Piston, Comp., Top, Std. **210601** Ring – Piston, Comp., Center, Std. **295843** Ring – Piston, Oil, Standard (w/expander)
	295853	Ring Set – Piston – .010" O.S. Includes: **210889** Ring – Piston, Comp., Top, .010" O.S. **210890** Ring – Piston, Comp., Center, .010" O.S. **295847** Ring – Piston, Oil, .010" O.S. (w/expander)
	295854	Ring Set – Piston – .020" O.S. Includes: **210893** Ring – Piston, Comp., Top, .020" O.S. **210894** Ring – Piston, Comp., Center, .020" O.S. **295849** Ring – Piston, Oil, .020" O.S. (w/expander)
	295855	Ring Set – Piston – .030" O.S. Includes: **210897** Ring – Piston, Comp., Top, .030" O.S. **210898** Ring – Piston, Comp., Center, .030" O.S. **295851** Ring – Piston, Oil, .030" O.S. (w/expander)
		Model 142700 Series Piston Ring Sets "Kool-Bore*"
	297815	Ring Set – Piston – Std. Consists of: **210600** Ring, Piston, Comp., Top Std. **211037** Ring, Piston, Comp., Center, Std. **210602** Ring, Piston, Oil, Std.
	297705	Ring Set – Piston – .010" O.S. Consists of: **211241** Ring, Piston, Comp., Top, .010" O.S. **211244** Ring, Piston, Comp., Center, .010" O.S. **211247** Ring, Piston, Oil, .010" O.S.
	297706	Ring Set – Piston – .020" O.S. Consists of: **211242** Ring, Piston, Comp., Top, .020" O.S. **211245** Ring, Piston, Comp., Center, .020" O.S. **211248** Ring, Piston, Oil, .020" O.S.
	297707	Ring Set – Piston – .030" O.S. Consists of: **211243** Ring, Piston, Comp., Top, .030" O.S. **211246** Ring, Piston, Comp., Center, .030" O.S. **211249** Ring, Piston, Oil, .030" O.S.
27	**68546**	Lock – Piston Pin
28	**295840**	Pin Assy. – Standard
	295841	Pin Assy. – .005" O.S.
29	**295839**	Rod Assy. – Connecting
30	**221725**	Dipper – Conn. Rod
31	**220811**	Lock – Conn. Rod Screw
32	**92659**	Screw – Conn. Rod and Bracket Mounting

*Trademark of Briggs & Stratton Corp.

REF. NO.	PART NO.	DESCRIPTION
33	**230385**	Valve – Exhaust
	Note:	**260444** Valve – Exhaust Used on **Model 142700** Series type No. 503023; also used on **Model 143700** Series type Nos. 0132, 0137, 503566.
34	**230386**	Valve – Intake
	Note:	**230385** Valve – Intake Used on **Model 142700** Series type No. 503023; also used on **Model 143700** Series type Nos. 0132, 0137, 503566.
35	**65906**	Spring – Intake Valve
36	**65906**	Spring – Exhaust Valve
	Note:	**26828** Spring – Ex. Valve Used on **Model 142700** Series type No. 503023; also used on **Model 143700** Series type Nos. 0132, 0137, 503566.
40	**230477**	Retainer – Valve Spring
	Note:	**292260** Rotocap – Exhaust Valve Used on **Model 142700** Series type No. 503023; also used on **Model 143700** Series type Nos. 0132, 0137, 503566.
43	**230476**	Pin – Valve Spring Ret.
	Note:	**230570** Pin – Valve Spring Retainer **230569** Ret. – Exhaust Valve Rotocap Used on **Model 142700** Series type No. 503023; also used on **Model 143700** Series type Nos. 0132, 0137, 503566.
45	**260125**	Tappet – Valve
46	**210728**	Gear – Cam
47	**295063**	Gear – Oil Slinger
50	**295759**	Elbow – Intake
	Note:	**211459** Elbow – Intake Used on **Model 142700** Series type No. 9152.
51	**†♦65647**	Gasket – Intake Elbow
52	**♦27828**	Gasket – Intake Elbow Mounting

♦Included in Gasket Set – Part No. 295970

REF. NO.	PART NO.	DESCRIPTION
53	**93329**	Screw – Sem
55	**295272**	Housing – Rewind Starter
	Note:	**298402** Housing – Rewind Starter Used on **Model 142700** Series type No. 9124; also used on **Model 143700** Series type No. 9024.
56	**295871**	Pulley – Rewind Starter
57	**294303**	Spring – Rewind Starter
58	**66564**	Rope – Rewind Starter (63″ long)
	Note:	If longer rope is needed order No. 66574 and cut to required length.
59	**230228**	Pin – Starter Grip
60	**66728**	Grip – Starter Rope
61	**66918**	Bumper – Starter Pulley
62	**93254**	Screw – Pulley Bumper Mounting Sem
63	**260414**	Spring – Ratchet
64	**230543**	Adapter – Ratchet Spring
65	**93163**	Screw – Rewind Starter Housing Mtg. Sem
	Note:	**230796** Nut – Starter Mounting **93420** Screw – Sem (on Blower Housing) **92290** Washer – Lock **90289** Washer – Lock (on Blower Housing) Used on **Model 142700** Series type No. 9124; also used on **Model 143700** Series type No. 9024.
66	**295684**	Clutch Assembly – Rewind Starter
	Note:	**298339** Clutch Assy. – Rewind Starter Used on **Model 142700** Series type No. 9124; also used on **Model 143700** Series type No. 9024.
67	**210400**	Housing – Rewind Starter Clutch

REF. NO.	PART NO.	DESCRIPTION
	Note:	**211373** Housing – Rewind Starter Clutch Used on **Model 142700** Series type No. 9124; also used on **Model 143700** Series type No. 9024.
68	**63770**	Ball – Clutch
69	**66718**	Washer – Starter Clutch, Thrust
70	**296916**	Ratchet – Rewind Starter Clutch
71	**221301**	Washer – Retainer (w/flange)
	Note:	**220575** Washer – Ret. **66738** Washer – Ratchet Sealing Used in clutches with 7 point shank ratchet.
72	**26032**	Ring – Clutch Retainer
73	**220823**	Screen – Rewind Starter
	Note:	**221668** Screen – Rewind Starter Used on **Model 142700** Series type No. 9124; also used on **Model 143700** Series type No. 9024.
74	**93042**	Screw – Rotating Screen Mounting Sem
	Note:	**93014** Screw – Rotating Screen Mounting Used on **Model 142700** Series type No. 9124; also used on **Model 143700** Series type No. 9024.
75	**220865**	Washer – Spring
76	**66738**	Washer – Ratchet Sealing Used with 7 point ratchet.
	Note:	**270045** Washer – Ratchet Sealing **260517** Spring – Sealing Washer Used on **Model 142700** Series type Nos. 0136, 9143, 9145; also used

†Included in Carburetor Overhaul Kit – Part No. 295938

142700 to 143707

REF. NO.	PART NO.	DESCRIPTION
		on **Model 143700** Series type No. 0036.
90	**298296**	Carburetor Assembly (Manual Choke)
	Note:	**298298** Carburetor Assy. (Choke-A-Matic) Used on **Model 142700** Series type Nos. 0015, 0017, 0019, 0118, 0127, 0133, 0134, 0137, 0139, 0140, 0142, 0144, 0151, 0152, 0153, 503016, 503021, 503026, 503029, 503036; also used on **Model 143700** Series type Nos. 0120, 0122, 0124, 0125, 0128, 0129, 0131, 0132, 0134, 0135, 0137, 503516, 503517, 503518, 503520, 503524, 503526, 503527, 503529, 503530, 503531, 503532, 503533, 503534, 503537, 503555, 503561, 503562, 503563, 503564, 503565, 503567, 503568, 503569, 503570, 503572. **298472** Carburetor Assy. (Mechanical Governor) Used on **Model 142700** Series type Nos. 9015, 9122, 9123, 9124, 9132, 9135, 9138, 9143, 9145, 9147, 9148, 9149, 9150, 9151, 9153; also used on **Model 143700** Series type Nos. 9023, 9024. **298773** Carburetor Assy. (Mechanical Governor) Used on **Model 142700** Series type Nos. 9152. Uses: **221787** Strap – Remote Choke **91359** Screw – Strap Mtg.
91	**298299**	Body Assembly – Upper Carburetor
	Note:	**298473** Body Assy. – Upper Carburetor Used on **Model 142700** Series type Nos. 9015, 9122, 9123, 9124, 9132, 9135, 9138, 9143, 9145, 9147, 9148, 9149, 9150, 9151, 9153; also used on **Model 143700** Series type Nos. 9023, 9024. **298774** Body Assy. – Upper Carburetor Used on **Model 142700** Series type No. 9152.
92	**298297**	Body – Upper Carb.
93	**23108**	Bushing – Throttle Shaft
94	**‡†292681**	Valve Assembly – Carburetor Idle
95	**93038**	Screw – Throttle and Choke Valve Mtg. Sem
96	**221600**	Valve – Throttle (Used after Serial No. 47775)
	Note:	**62940** Valve – Throttle (Used before Serial No. 47776)
97	**294995**	Shaft and Lever – Throttle
	Note:	**297845** Shaft and Lever – Throttle Used on **Model 142700** Series type Nos. 9015, 9122, 9123, 9124, 9132, 9135, 9138, 9143, 9145, 9147, 9148, 9149, 9150, 9151, 9153; also used on **Model 143700** Series type Nos. 9023, 9024. **298772** Shaft and Lever – Throttle Used on **Model 142700** Series type No. 9152.
98	**91920**	Screw – Machine, Fill. Hd. 8-32 x 5/8"
99	**26157**	Spring – Throttle Adjustment
100	**295804**	Stop – Throttle
	Note:	**61967** Stop – Throttle Used on **Model 142700** Series type Nos. 9015, 9122, 9123, 9124, 9132, 9135, 9138, 9143, 9145, 9147, 9148, 9149, 9150, 9151, 9152, 9153; also used on **Model 143700** Series type Nos. 9023, 9024.
101	**93043**	Pin – Throttle Stop
102	**†27918**	Gasket – Carb. Body
103	**99333**	Float – Carburetor
104	**†23114**	Pin – Float Hinge
105	**†293962**	Valve and Seat – Fuel Inlet
106	**27639**	Gasket – Inlet Valve Seat
107	**295860**	Body Assy. – Lower Carb. (Manual Choke)
	Note:	**295883** Body Assy. – Lower Carburetor (Choke-A-Matic) Used on **Model 142700** Series type Nos. 0015, 0017, 0019, 0118, 0127, 0133, 0134, 0137, 0139, 0140, 0142, 0144, 0151, 0152, 0153, 503016, 503021, 503026, 503029, 503036; also used on **Model 143700** Series type Nos. 0120, 0122, 0124, 0125, 0128, 0129, 0131, 0132, 0134, 0135, 0137, 503516, 503517, 503518, 503520, 503524, 503526, 503527, 503529, 503530, 503531, 503532, 503533, 503534, 503537, 503555, 503561, 503562, 503563, 503564, 503565, 503567, 503568, 503569, 503570, 503572.
108	**62872**	Valve Choke
109	**295374**	Shaft and Lever – Choke (Manual)
	Note:	**295372** Shaft Assy. – Choke (Choke-A-Matic) Used on **Model 142700** Series type Nos. 0015, 0017, 0019, 0118, 0127, 0133, 0134, 0137, 0139, 0140, 0142,

†Included in Carburetor Overhaul Kit – Part No. 295938

REF. NO.	PART NO.	DESCRIPTION
		0144, 0151, 0152, 0153, 503016, 503021, 503026, 503029, 503036; also used on **Model 143700** Series type Nos. 0120, 0122, 0124, 0125, 0128, 0129, 0131, 0132, 0134, 0135, 0137, 503516, 503517, 503518, 503520, 503524, 503526, 503527, 503529, 503530, 503531, 503532, 503533, 503534, 503537, 503555, 503561, 503562, 503563, 503564, 503565, 503567, 503568, 503569, 503570, 503572. **298757** Shaft and Lever – Choke (Manual) Used on **Model 142700** Series type No. 9152.
110	**62899**	Washer – Choke Lever
111	**26155**	Spring – Choke Lever
	Note:	**260368** Spring – Choke Return (Choke-A-Matic) Used on **Model 142700** Series type Nos. 0015, 0017, 0019, 0118, 0127, 0133, 0134, 0137, 0139, 0140, 0142, 0144, 0151, 0152, 0153, 503016, 503021, 503026, 503029, 503036; also used on **Model 143700** Series type Nos. 0120, 0122, 0124, 0125, 0128, 0129, 0131, 0132, 0134, 0135, 0137, 503516, 503517, 503518, 503520, 503524, 503526, 503527, 503529, 503530, 503531, 503532, 503533, 503534, 503537, 503555, 503561, 503562, 503563, 503564, 503565, 503567, 503568, 503569, 503570, 503572.
112	**23123**	Screw – Choke Lever
113	**297978**	Nozzle – Carburetor Used after Serial No. 47775.
	Note:	**†296286** Nozzle – Carb. Used before Serial No. 47776.
114	**†68667**	Gasket – Nozzle
115	**†23117**	Retainer – Needle Valve
116	**†68677**	Packing – Needle Valve
117	**†23118**	Nut – Needle Valve Packing
118	**†230009**	Valve – Needle
119	**90746**	Screw – Machine, Fill. Hd. – 10-32 x 5/8"
120	**92290**	Washer – Lock – No. 10 x 1/16" x 3/64"
121	**295938**	Carburetor Overhaul Kit
123	**91456**	Screw – Cap, Hex. Hd. – 1/4-20 x 1"
	Note:	**93483** Screw – Sem Used on **Model 142700** Series type No. 9152.
124	**92636**	Screw – Cap, Hex. Hd. – 1/4-20 x 2"
160	**296434**	Cleaner Assembly – Air
	Note:	**296397** Cleaner – Air Used before Serial No. 423826 on **Model 143700** Series type Nos. 0122, 503518, 503531, 503544, 503545, 503546. **296897** Cleaner Assy. – Air Used on **Model 143700** Series type Nos. 0120, 0123, 0124, 503532, 503536, 503540, 503548, 503552, 503564, 503569.
161	**296704**	Body Assy. – Air Cleaner
	Note:	**296898** Body Assy. – Air Cleaner Used on **Model 143700** Series type Nos. 0120, 0123, 0124, 503532, 503536, 503540, 503548, 503552, 503564, 503569.
162	**296270**	Cover and Filter – Air Cleaner
163	**27907**	Gasket – Air Cleaner Mounting (For Oil Bath and Rectangular Foam Type Air Cleaner)
164	**298410**	Pipe Assembly – Air Cleaner (For Round Foam Type) Used after Serial No. 423825.
	Note:	**295593** Pipe Assy. – Air Cleaner (For Oil Bath and Rectangular Foam Type) Used before Serial No. 423826. **298756** Pipe Assy. – Air Cleaner Used on **Model 142700** Series type No. 9152.
	298595	Air Cleaner Pipe Assy. with Speed Control Rod Strap (For Round Foam Type Air Cleaner) Used after Serial No. 423825 on **Model 142700** Series type Nos. 0110, 0111, 0113, 0117; also used after Serial No. 423825 on **Model 143700** Series type Nos. 0110, 0111, 0113, 0114, 0117, 0120, 0126.
	Note:	**295378** Air Cleaner Pipe Assy. with Speed Control Rod Strap (For Oil Bath and Rectangular Foam Type Air Cleaner) Used before Serial No. 423826 on **Model 142700** Series type Nos. 0110, 0111, 0113, 0117, 503010, 503011, 503013, 503020, 503028; also used before Serial No. 423826 on **Model 143700** Series type Nos. 0110, 0111, 0113, 0114, 0117, 0120, 0126, 503510, 503511, 503514, 503515, 503525, 503540, 503542, 503566.

†Included in Carburetor Overhaul Kit – Part No. 295938

REF. NO.	PART NO.	DESCRIPTION
165	93453	Nut – Wing
	Note:	**92067** Nut – Wing Used before Serial No. 423826 on **Model 142700** Series type Nos. 0134, 0136, 9132, 9135, 9143, 9145, 503023; also used before Serial No. 423826 on **Model 143700** Series type No. 0134.
166	230633	Stud – Air Cleaner
	Note:	**230487** Stud – Air Cleaner Used before Serial No. 423826 on **Model 143700** Series type Nos. 0120, 0123, 0124, 503532, 503534, 503536, 503540, 503548, 503552, 503564, 503569. **230696** Stud – Air Cleaner Used before Serial No. 423826 on **Model 142700** Series type Nos. 0134, 0136, 9132, 9135, 9143, 9145, 503023; also used before Serial No. 423826 on **Model 143700** Series type No. 0134.
167	66648	Gasket – Air Cleaner
168	22832	Strap – Air Cleaner Pipe (Used only on **Model 142700, 143700** Series engines not equipped with speed control housing assembly.)
169	90832	Washer – Lock – 1/4" x 3/32" x 5/64"
170	91468	Screw – Cap, Hex. Hd. – 1/4-20 x 3/8"
171	92129	Nut – Hex. – 1/4-28
172	27906	Gasket – Air Cleaner
180	290816	Tank Assy. – Fuel
	Note:	For Fuel Tank welded to Blower Housing See Ref. No. **304** and Order Part No. **295898**.
	Note:	Fuel Tanks for the following type numbers are supplied by the equipment manufacturer: **Model 142700** Series type Nos. 0015, 0110, 0111, 0113, 0121, 0126, 9122, 9123, 9124, 9138, 503010, 503024, 503025, 503026, 503035; also **Model 143700** Series type Nos. 0110, 0111, 0113, 0114, 0120, 0121, 0122, 0123, 503510, 503511, 503513, 503514, 503516, 503518, 503520, 503522, 503529, 503531, 503532, 503536, 503537, 503540, 503541, 503544, 503545, 503546, 503548. **292945** Tank Assy. – Fuel Used on type Nos. 503521, 503528. Uses: **293934** Valve – Shut-off **295896** Outlet (includes strainer)
181	69221	Cap – Fuel Tank (screw-on type)
	Note:	Cap – Fuel Tank used on type No. 503560 is furnished by the equipment manufacturer. **69961** Cap – Fuel Tank (bayonet type) Used on engines before Serial No. 19401 except type Nos. 503521, 503528, which used part No. 69221. **293270** Cap – Fuel Tank Used on **Model 142700** Series type Nos. 0127, 0129, 0130, 0133, 0137, 0139, 0140, 0142, 0149, 0151, 0153, 9132, 9135, 9147, 9148, 9149, 9150, 503027, 503028, 503034, 503036; also used on **Model 143700** Series type Nos. 0124, 0125, 0135, 0136, 503515, 503517, 503561, 503567, 503568, 503569, 503572. **297863** Cap – Fuel Tank Used on **Model 142700** Series type Nos. 0136, 9015, 9143, 9145; also used on **Model 143700** Series type No. 0036.
182	221088	Bracket – Fuel Tank, R.H.
	221087	Bracket – Fuel Tank, L.H.
	Note:	**220195** Bracket – Fuel Tank Used on type No. 503521. Uses: **93158** Screw – Sem (Mtg. to Tank) **221623** Support Tank **91439** Screw – Cap, Hex. Hd. – 1/4-20 x 3/8" (At Tank) **92278** Nut, Hex. – 1/4-20 (At Tank) **90832** Washer – Lock (At Tank) **92272** Screw – Cap, Hex. Hd. – 5/16-18 x 3/4" (At Cylinder) **90366** Washer – Lock (At Cylinder) Used on **Model 142700** Series type No. 9148; also used on **Model 143700** Series type Nos. 0124, 503569.
183	291367	Strap Assy. – Fuel Tank
184	91257	Screw – Machine, Fill. Hd. – 1/4-20 x 1-1/2"
185	90970	Nut – Square, 1/4-20
186	63377	Connector – Fuel Pipe (For Metal Fuel Pipe)
186A	67218	Connector (For Flexible Fuel Pipe)
187	295832	Pipe – Fuel (Metal)
	Note:	Fuel pipes for the following type numbers

REF. NO.	PART NO.	DESCRIPTION
		are supplied by the equipment manufacturers: **Model 142700** Series type Nos. 0015, 0110, 0111, 0113, 0121, 0126, 9122, 9123, 9124, 9138, 503010, 503024, 503025, 503026, 503035; also **Model 143700** Series type Nos. 0110, 0111, 0113, 0114, 0120, 0121, 0122, 0123, 503510, 503511, 503513, 503514, 503518, 503520, 503521, 503522, 503528, 503529, 503531, 503532, 503533, 503536, 503537, 503540, 503541, 503544, 503545, 503546, 503548, 503550, 503558.
		29476 Pipe – Fuel Used on **Model 143700** Series type Nos. 503551, 503552, 503563, 503564.
187A	**296004**	Pipe – Fuel (Flexible – 23" Long)
	Note:	**299942** Pipe – Fuel (Flexible – 13-1/2" Long) Used on **Model 143700** Series type Nos. 503530, 503537.
188	**92272**	Screw – Cap, Hex. Hd. – 5/16-18 x 3/4"
189	**90366**	Washer – Lock – 5/16 x 1/8 x 1/16"
192	**91397**	Nut – Hex. 5/16-18
193	**93136**	Screw – Cap, Hex. Hd. – 7/16-14 x 1"
	Note:	**92272** Screw – Cap, Hex. Hd. – 5/16-18 x 3/4" **90366** Washer – Lock – 5/16 x 1/8 x 1/16" Used to mount tank bracket to cylinder on **Model 142700** Series type No. 9148; also used on **Model 143700** Series type Nos. 0114, 503514, 503532, 503534, 503536, 503537, 503540.
194	**91808**	Washer – Lock – 7/16 x 5/32 x 1/8"
200	**295844**	Blade – Air Vane Gov.
	Note:	**221148** Guide – Air Used on **Model 142700** Series type Nos. 9015, 9122, 9123, 9124, 9132, 9135, 9138, 9143, 9145, 9147, 9148, 9149, 9150, 9151, 9152, 9153; also used on **Model 143700** Series type Nos. 9023, 9024.
201	**260365**	Link – Air Vane Gov.
201A	**260710**	Link – Mechanical Gov.
	Note:	**260862** Link – Mechanical Governor Used on **Model 142700** Series type No. 9152.
202	**260373**	Link – Bell Crank to Throttle Lever
203	**221052**	Crank – Bell
204	**23688**	Bushing – Control Lever
204A	**230117**	Bushing – Bell Crank
205	**92722**	Screw – Bell Crank Mounting
206	**230533**	Nut – Gov. Control Rod
	Note:	**230149** Nut – Control Rod Used on **Model 142700** Series type Nos. 0016, 0018.
207	**26855**	Spring – Governor Control Rod
208	**230460**	Rod – Gov. Control
	Note:	**230499** Rod – Control Used on **Model 142700** Series type Nos. 0016, 0018.
209	**260321**	Spring – Air Vane Gov.
209A	**260723**	Spring – Mechanical Gov.
219	**298614**	Oil Slinger, Gov. Gear and Bracket Assembly Used only on **Model 142700 and 143700** Series type Nos. 9000 to 9154 after Serial No. 6410071.
	Note:	**298486** Oil Slinger, Gov. Gear and Bracket Assembly Used on **Model 142700 and 143700** Series type Nos. 9000 to 9154 before Serial No. 6410081.
222	**221574**	Plate – Gov. Control
	Note:	**93424** Screw – Control Plate Used on **Model 142700** Series type Nos. 9152, 9153.
223	**221517**	Lever – Gov. Control
	Note:	**221781** Stop – Lever **22398** Washer – Flat **91622** Washer – Lock **93392** Screw – Mach., Rd. Hd. Used on **Model 142700** Series type Nos. 9123, 9124; also used on **Model 143700** Series type Nos. 9023, 9024.
224	**93389**	Screw – Gov. Control Lever Mtg. Sem
225	**230759**	Shaft – Gov. Lever
227	**298303**	Lever Assy. – Governor
230	**221559**	Washer – Gov. Lever
240	**295977**	Filter Assembly – Fuel
	Note:	**91635** Connector Used to connect fuel filter to tank on **Model 143700** Series type Nos. 0122, 503518, 503531, 503544, 503545, 503546. **99910** Filter Assy. – Fuel Used on type Nos. 503551, 503552, 503563, 503564. **292797** Outlet (includes strainer) Used on type Nos. 503521, 503528. **295896** Outlet (includes strainer) Used on **Model 142700** Series type Nos. 0016, 0017, 0127, 0128, 0129, 0130, 0133, 0136, 0137, 0139, 0140, 0142, 0149, 0151, 0153, 9015,

REF. NO.	PART NO.	DESCRIPTION
		9132, 9135, 9143, 9145, 9147, 9148, 9149, 9150, 503027, 503028, 503030, 503032, 503034, 503036; also used on **Model 143700** Series type Nos. 0036, 0125, 0135, 0136, 503515, 503517, 503521, 503528, 503560, 503561, 503567, 503568, 503569, 503572.
		297563 Outlet – Fuel (At Tank)
		298090 Filter – Fuel (in Fuel Pipe) Used on **Model 142700** Series type Nos. 0134, 9153.
241	**296019**	Cover Assembly – Fuel Filter
	Note:	**99909** Cover Assy. – Fuel Filter Used on **Model 143700** Series type Nos. 503551, 503552, 503563, 503564.
242	**295913**	Valve – Fuel Shut-off
	Note:	**293934** Valve – Fuel Shut-off Used on **Model 142700** Series type Nos. 0016, 0017, 0127, 0128, 0129, 0130, 0133, 0134, 0136, 0137, 0139, 0140, 0142, 0149, 0151, 0153, 9015, 9132, 9135, 9143, 9145, 9147, 9148, 9149, 9150, 9153, 503027, 503028, 503030, 503032, 503034, 503036; also used on **Model 143700** Series type Nos. 0036, 0125, 0135, 0136, 503515, 503517, 503521, 503528, 503560, 503561, 503567, 503568, 503569, 503572.
243	**22547**	Screen – Fuel Filter
244	**67218**	Connector – Fuel Pipe Elbow (For Flexible Fuel Pipe)
	Note:	**53029** Connector – Fuel Pipe (Straight) (For Metal Fuel Pipe) Used on **Model 142700** Series type Nos. 0016, 0017, 0127, 0128, 0129, 0130, 0133, 0136, 0137, 0139, 0140, 0142, 0149, 0151, 0153, 9015, 9132, 9135, 9143, 9145, 9147, 9148, 9149, 9150, 503027, 503028, 503030, 503032, 503034, 503036; also used on **Model 143700** Series type Nos. 0036, 0125, 0135, 0136, 503515, 503517, 503521, 503528, 503551, 503552, 503560, 503561, 503563, 503564, 503567, 503568, 503569, 503572.
		230318 Connector – Flexible Fuel Pipe (Straight) Used on **Model 142700** Series type No. 9153; also used on **Model 143700** Series type No. 503528.
245	**♦68477**	Gasket – Fuel Filter Bowl
246	**298683**	Bowl – Fuel Filter
247	**99665**	Yoke – Fuel Filter
258	**93062**	Screw – Sem
260	**295917**	Housing – Speed Control
261	**93105**	Screw – Sem
263	**93223**	Screw – Stop
264	**90355**	Nut – Hex. – 10-32
265	**22372**	Clamp – Casing
265A	**221535**	Clamp – Casing
267	**90080**	Screw – Machine, Rd. Hd. – 10-32 x 7/16"
268	**65616**	Casing – Control Wire – 72" long
	Note:	If longer casing is required, specify length in inches; if shorter wire is needed, order No. 65616 and cut to required length.
269	**26633**	Wire – Control – 78" long
	Note:	If longer wire is required, specify length in inches; if shorter wire is needed, order No. 26633 and cut to required length.
270	**63426**	Locknut – Control Wire Casing
271	**290568**	Lever Assy. – Control
300	**294599**	Muffler – Exhaust
	Note:	**89953** Muffler – Exhaust Used on **Model 142700** Series type Nos. 0151, 0152, 0153.
		296359 Muffler – Exhaust Used on type Nos. 503530, 503537.
301	**91245**	Nipple – Exhaust
302	**91242**	Locknut – Muffler and Elbow
303	**91205**	Elbow – Muffler – 90°
	Note:	**91219** Elbow – Muffler, 45° Street Used on type No. 503530.
		91464 Elbow – Muffler, 90° Street Used on **Model 142700** Series type Nos. 0127, 0151, 0152, 0153, 9152.
304	**295389**	Housing – Blower
	Note:	**294605** Housing – Blower Used on **Model 142700** Series type Nos. 9122, 9138, 9151, 9152, 9153.
		295898 Housing – Blower (with tank) Used on **Model 142700** Series type Nos. 0016, 0017, 0127, 0128, 0129, 0130, 0133, 0136, 0137, 0139, 0140, 0142, 0149, 0151, 0153, 503027, 503028, 503030, 503032, 503034, 503036; also used on **Model 143700** Series type Nos.

♦Included in Gasket Set – Part No. 295970

REF. NO.	PART NO.	DESCRIPTION
		0036, 0125, 0135, 0136, 503515, 503517, 503560, 503561, 503567, 503568, 503572.
		296446 Housing – Blower
		Used on **Model 143700** Series type Nos. 0122, 503531, 503545.
		296461 Housing – Blower
		Used on **Model 143700** Series type Nos. 0120, 0123, 503532, 503534, 503536, 503540, 503546, 503548, 503552, 503564.
		When ordering this blower housing, order No. 297415 Screw and Nut Kit also; to mount the belt guard.
		296470 Housing – Blower
		Used on **Model 143700** Series type Nos. 0114, 503514.
		When ordering this blower housing, order No. 297415 Screw and Nut Kit also; to mount the belt guard.
		296657 Housing – Blower
		Used on **Model 143700** Series type No. 503537.
		When ordering this blower housing, order No. 297415 Screw and Nut Kit also; to mount the belt guard.
		297189 Housing – Blower
		Used on **Model 142700** Series type Nos. 9123, 9138; also used on **Model 143700** Series type No. 9023.
		297318 Housing – Blower
		Used on **Model 142700** Series type Nos. 0134, 0152, 503013; also used on **Model 143700** Series type Nos. 0113, 0129.
		298062 Housing – Blower (with tank)
		Used on **Model 142700** Series type No. 9148; also used on **Model 143700** Series type Nos. 0124, 503569.
		When ordering this blower housing, order No. 297415 Screw and Nut Kit also; to mount the belt guard.
		298342 Housing – Blower
		Used on **Model 142700** Series type No. 9124; also used on **Model 143700** Series type No. 9024.
		298386 Housing – Blower (with tank)
		Used on **Model 142700** Series type Nos. 9015, 9132, 9135, 9143, 9145, 9147, 9149, 9150.
305	**93158**	Screw – Blower Housing Mounting Sem
	Note:	**93294** Screw – Blower Housing Mtg. Sem (at bottom (2) holes)
		Used on **Model 142700** Series type Nos. 0016, 0017, 0127, 0128, 0129, 0130, 0133, 0136, 0137, 0139, 0140, 0142, 0149, 0151, 0153, 9132, 9135, 9143, 9145, 9147, 9148, 9149, 9150; also used on **Model 143700** Series type Nos. 0036, 0114, 0120, 0123, 0124, 0125, 0135, 0136, 9023, 503515, 503517, 503552, 503560.
		93158 Screw – Sem (2)
		62199 Washer – (2)
		Used in bottom holes of blower housing for mounting to engine on **Model 143700** Series type Nos. 0135, 0136, 9023, 9024, 503514.
306	**221005**	Shield – Cylinder
307	**93163**	Screw – Cylinder Shield Mounting Sem
308	**220824**	Cover – Cylinder Head
	Note:	**221153** Cover – Cylinder Head
		Used on **Model 143700** Series type Nos. 0137, 503023.
309	**296122**	Motor – Electric Starter (12 volt)
		(Electric Auto-Lite No. Med 4001) For service on these motors see your nearest "Authorized Auto-Lite Service Station".
310	**93268**	Bolt – Case
317	**296013**	Bracket – Starter
	Note:	**297493** Bracket – Starter
		Used on **Model 143700** Series type Nos. 0124, 503561, 503569.
320	**297162**	Pulley – Idler
321	**210961**	Pulley – Starter Drive
321A	**210899**	Pulley – Starter Drive
322	**90931**	Screw – Cap, Hex. Hd. – 1/4-20 x 2-1/4"
	Note:	**92636** Screw – Cap, Hex. Hd. – 1/4-20 x 2"
		Used on **Model 142700** Series type No. 503025; also used on **Model 143700** Series type Nos. 503531, 503545, 503556.
323	**67318**	Belt – Vee
	Note:	Order Vee-Belt used on **Model 143700** Series type Nos. 503531, 503545 from the equipment manufacturer.
323A	**68588**	Belt – Vee
		Used after Serial No. 6503171.

142700 to 143707

REF. NO.	PART NO.	DESCRIPTION
	Note:	**66828** Belt – Vee Used before Serial No. 6503181. Order Vee-Belt for **Model 142700** Series type No. 503025 and also for **Model 143700** Series type Nos. 503531, 503545, 503556 from the equipment manufacturer.
324	221067	Screen – Electric Starter
325	221400	Pulley – Rope Starter
326	92272	Screw – Cap, Hex. Hd. – 5/16-18 x 3/4''
327	91388	Washer – Lock – 5/16 x 3/32 x 5/64
328	221122	Guard – Belt
328A	221447	Guard – Belt
	Note:	**211024** Guard – Belt Used on **Model 143700** Series type Nos. 0122, 503545.
329	93246	Screw – Belt Guard Mounting Sem
330	29878	Rope – Starter
332	92284	Nut
333	296834	Armature Assembly
334	93381	Screw – Armature Mounting Sem
335	93381	Screw – Armature Mounting Sem
336	294735	Cable – Ignition Used before Serial No. 14677 on coils which do not have molded in cables.
	Note:	**296010** Cable – Ignition Used before Serial No. 14677 on coils which do not have molded in cables. Used on Model 1427 Series type No. 503023.
337	29693	Plug – Spark
338	29806	Gasket – Spark Plug
339	29667	Breaker Assy. – Ignition
340	26018	Spring – Breaker Arm
342	65704	Plunger – Breaker Point
343	29861	Condenser
344	93370	Screw – Condenser Mounting Sem
345	221046	Cover – Breaker Point
346	93014	Screw – Breaker Point Cover Mounting Sem
347	221808	Switch – Stop
348	67118	Block – Stop Switch
349	221077	Blade – Switch
350	221078	Clamp – Switch Blade
351	93218	Screw – Stop Switch Mounting
352	66068	Washer – Insulating
353	92791	Washer – Lock – Shakeproof
354	90576	Nut – Hex. – 8-32
355	66554	Collar – Insulating
356	295413	Wire – Ground
358	295970	Gasket Set
362	291630	Shield – Spark Plug (with stop switch)
	Note:	**66538** Elbow – Spark Plug Used on **Model 142700** Series type Nos. 0137, 9123, 9124, 9132, 9145; also used on **Model 143700** Series type Nos. 0131, 9023, 9024.
363	19165	Puller – Flywheel
370	66432	Washer – Plain
380	62199	Washer – Plain
381	91419	Screw – Cap, Hex. Hd. – 1/4-20 x 5/8''
	Note:	**92666** Screw – Cap, Hex. Hd. – 1/4-20 x 1/2'' Used on **Model 143700** Series type Nos. 503548, 503561.
382	92666	Screw – Cap, Hex. Hd. – 1/4-20 x 1/2''
383	89838	Wrench – Spark Plug
413	230581	Nut – Starter Mounting
474	296436	Armature – Flywheel Generator
475	296562	Rectifier
477	67538	Sleeving – Wire
478	296367	Plate – Generator Mtg.
480	93163	Screw – Support Plate and Bracket Mtg. Sem
481	230582	Spacer – Armature Mtg.
482	93234	Screw – Armature Mounting Sem
483	296266	Capacitor (Condenser)
484	93166	Screw – Self Tapping, Hex. Hd., Sem
485	296437	Post Assembly – Fuse
486	67135	Fuse – AG – 1-1/2 Amperes
487	296347	Cap – Fuse Holder
488	296579	Block Assembly – Fuse
489	93237	Screw – Fuse Block Mounting Sem
490	67125	Fuse – 3 AG – 7-1/2 Amperes
491	221241	Support – Charger Mtg.
492	296028	Starter – Generator (12 volt) (Delco-Remy No. 1101968 and Pulley Delco-Remy No. 1949358)
	Note:	The parts listed below are used on **Model 143700** Series type Nos. 0122, 503545. **296263** Solenoid – Starter (Delco-Remy No. 001466) **295158** Ammeter (Stewart-Warner No. 357-W) For service on the above units see your nearest "Authorized Delco-Remy Service Station of United Motors."
493	211112	Bracket – Lower Starter
497	91203	Screw – Cap, Hex. Hd. – 5/16-18 x 1-3/4''
498	220881	Link – Adjusting
499	92035	Screw – Cap, Hex. Hd. – 5/16-18 x 2-1/2''
500	91325	Washer – Plain
501	295924	Regulator – Voltage (Delco-Remy No. 1118988)
503	221205	Strap – Starter (long)
	Note:	**296814** Brace Assy. **221394** Link

REF. NO.	PART NO.	DESCRIPTION
		Used on **Model 143700** Series type Nos. 0124, 503548, 503561, 503569.
504	**221206**	Strap – Starter (short)
	Note:	**221365** Strap – Starter Used on **Model 143700** Series type No. 503537.
505	**92278**	Nut – Hex. – 1/4-20
506	**90072**	Screw – Machine, Rd. Hd. – 8-32 x 5/8"
507	**66895**	Insulator
508	**93294**	Screw – Blower Housing Mounting Sem (Used at bottom holes)
512	**296560**	Armature and Wiring Assembly
513	**296567**	Clutch Assy. – Electric Starter
514	**91700**	Nut – Hex. – 1/4-20
517	**295423**	Pulley – Rope Starter (with screen)
	Note:	**221400** Pulley – Rope Starter Used on **Model 142700** Series type Nos. 0125, 9123, 503025; also used on **Model 143700** Series type Nos. 9023, 503556.
518	**69932**	Rope – Starter
521	**298529**	Shielding – Ignition Cable Used after Serial No. 14676 on cables molded into the ignition coil.
535	**270209**	Element – Air Cleaner (Round Foam Type)
	Note:	**27987** Element – Air Cleaner (Rectangular Foam Type) Used before Serial No. 423826 on **Model 142700** Series type Nos. 0136, 503023. **270067** Element – Air Cleaner (Rectangular) Used before Serial No. 423826 on **Model 142700** Series type Nos. 0134, 9132, 9135, 9143, 9145, 9147, 9148; also used before Serial No. 423826 on **Model 143700** Series type No. 0134.
536	**298681**	Cleaner Assy. – Air (Round Foam Type) Used after Serial No. 423825.
	Note:	**297036** Cleaner Assy. – Air (Rectangular Foam Type) Used before Serial No. 423826 on **Model 142700** Series type Nos. 0136, 503023. **297595** Cleaner Assy. – Air (Rectangular Foam Type) Used before Serial No. 423826 on **Model 142700** Series type Nos. 0134, 9132, 9135, 9143, 9145, 9147, 9148; also used before Serial No. 423826 on **Model 143700** Series type No. 0134.
552	**230761**	Bushing – Gov. Shaft
562	**92613**	Bolt – Governor Lever
590	**93226**	Screw – Breaker Mounting Sem
592	**90356**	Nut – Hex., 10-24
597	**93258**	Screw – Plate Mounting
600	**270055**	Spacer – Air Cleaner
	Note:	Used only with Rectangular Foam Type Air Cleaner.
601	**93053**	Clamp – Fuel Pipe
605	**298758**	Bracket – Guard Used after Serial No. 6503171.
	Note:	**297170** Bracket – Guard Used before Serial No. 6503181.
606	**221790**	Strap – Adjusting Used after Serial No. 6503171.
	Note:	**221445** Strap – Adjusting Used before Serial No. 6503181. **220881** Strap – Adjusting Used on type Nos. 503531, 503545.
608	**295001**	Starter Assy. – Rewind
	Note:	**298340** Starter Assy. – Rewind Used on **Model 142700** Series type No. 9124; also used on **Model 143700** Series type No. 9024.
614	**93306**	Cotter – Hair Pin
615	**93307**	Retainer – E-Ring
621	**297472**	Switch – Stop
642	**221634**	Cover – Air Cleaner
643	**280002**	Cup – Air Cleaner
655	**221014**	Anchor – Spring
656	**260672**	Spring – Idler Arm
657	**92715**	Screw – Sem
658	**221576**	Strap – Control Plate
659	**93390**	Nut – Governor Shaft Bushing
660	**221577**	Bracket – Control Plate
665	**296768**	Oil Minder

ORIGINAL

BRIGGS & STRATTON

SERVICE PARTS ®